Louis O'Halloran Scholarship Award Submission Paper

Application of Smart Implantable Myoelectric Sensors with Wireless Communications for Prosthetic Devices

Ciarán Fahy **Electronic Eng. Y3** **10-Jan-2020**

Introduction

Body Area Network (BAN) systems for communications between worn and implanted devices are becoming widespread, however the shrinking physical dimensions and power requirements of smart devices means more can be done to improve on their implementation. This report discusses applications of implanted electromyography (EMG) devices for creating permanent diagnostic and control interfaces with electromechanical prostheses, and proposes that a microcomputer, instrumentation amplifier, ADC and wireless communications circuitry can be packaged into small biocompatible packages for implantation into the human body to sense and transmit bio-electrical signals. While this idea is not entirely novel, little documentation exists on the topic.

Background on Traditional EMG

In EMG, the electrical signals from the muscles are read and interpreted using a computer. The most prominent method of making these readings is using surface electrodes, which pick up the small electrical signals conducted through the skin by the muscle cells (motor axons) in contraction. "[The] signal is normally a function of time and is describable in terms of its amplitude, frequency and phase. The EMG signal is a biomedical signal that measures electrical currents generated in muscles during its contraction representing neuromuscular activities."[1] The dominant energy of the EMG signal exists in the range of 50-150Hz, so the signal is generally band filtered to 20-300Hz.[2] The signal is also notch filtered at 50Hz to remove mains frequency noise (or 60Hz depending on country). A differential amplifier is commonly used as a first stage amplifier. A simplified diagram of this method is shown in F*igure 1* below. The use case being considered is the control of electromechanical prostheses using EMG devices, so the output of the computer is used to control actuators.

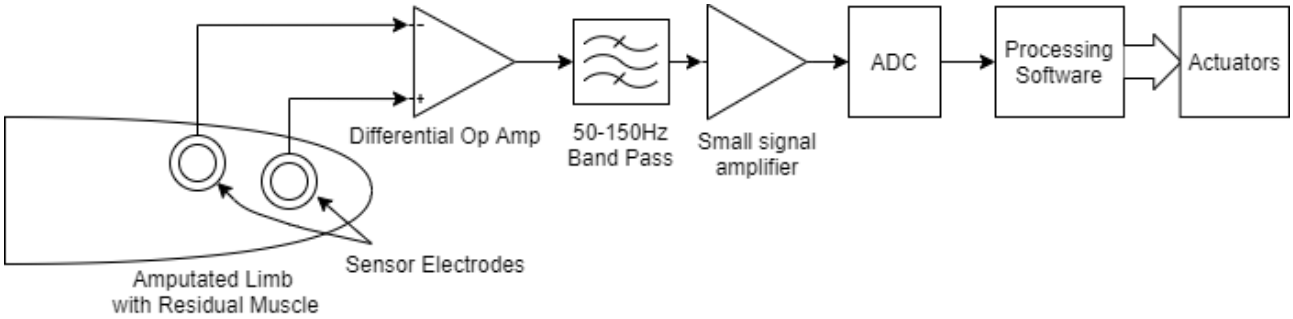

Figure 1: Surface EMG Processing

1 Raez MB, Hussain MS, Mohd-Yasin F. Techniques of EMG signal analysis: detection, processing, classification and applications [published correction appears in Biol Proced Online. 2006;8():163]. Biol Proced Online. 2006;8:11–35. doi:10.1251/bpo115

2 De Luca, Carlo J. . Surface Electromyography: Detection And Recording. DelSys Incorporated. 2002

A typical EMG input waveform and its amplified, rectified and filtered output may appear as shown in *Figure 2.*[3]

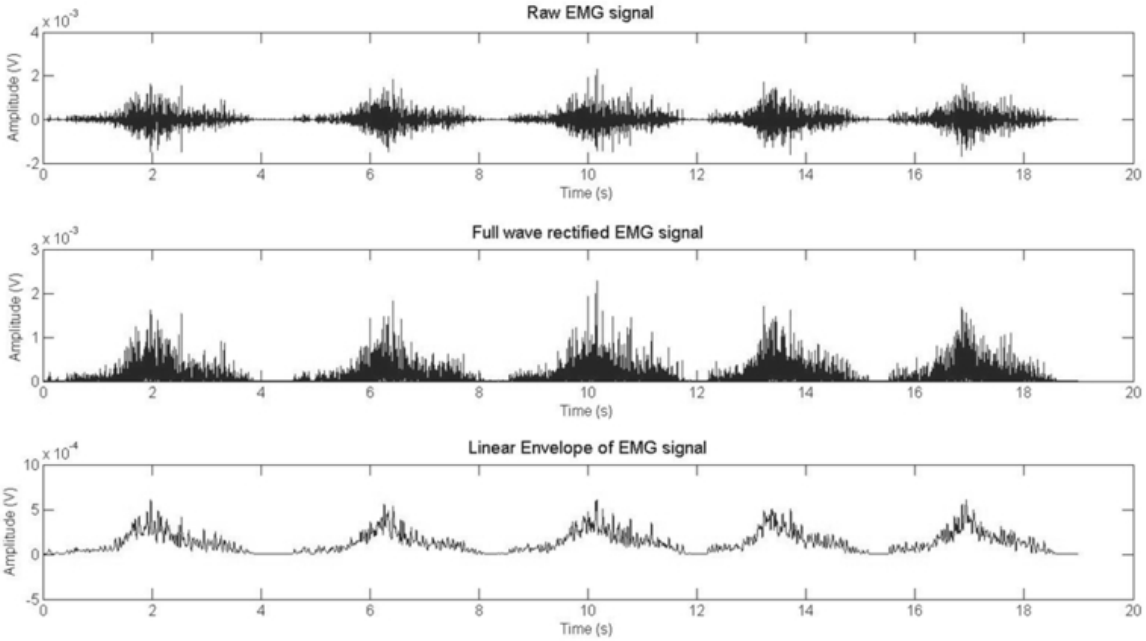

Figure 2: Signal Processing in time Domain

The output of the differential amplifier is shown in the 'Raw EMG Signal' graph. The 'linear envelope' is the waveform which will be the input to the classification system to determine which mechanical movements to make (if any).
Classification of the signals, i.e. determining the actions to take based on the state of each signal, is carried out by a PC or specialised processor as it requires somewhat complex analysis, however qualitatively it is clear that the magnitude of the output corresponds with the intensity of the muscle contraction. Complex analysis is achieved in modern systems through a trained neural network, and quantitative analysis may be achieved through simple level triggering, as the amplitude of the signal correlates with the strength of contraction. Additionally, rectification and envelope detection is often done in software in typical surface EMG processing.

3 Howard, Róisín. (2016). Wireless Sensor Devices In Sports Performance. IEEE Potentials. 35. 40-42. 10.1109/MPOT.2015.2501679.

Proposed Design

Electronics:

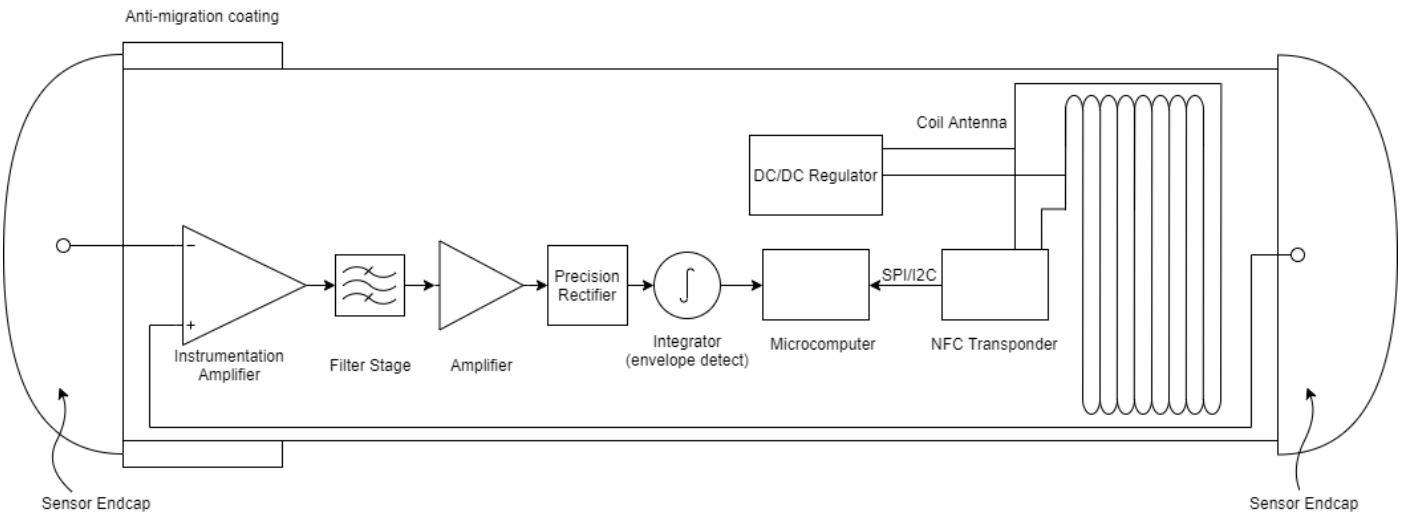

Figure 3: Schematic Drawing

The electronics within the implant follow the same basic operating principles as the previous example in *Figure 1*, except that the software processing does not occur in the device; this is merely a device for data acquisition. The signal processing is achieved through discrete components to minimise the processor power required in the device. Additionally, the device must be powered inductively through a coil, similarly to the operation of a passive NFC chip. Communications will be covered further in the next section. The differential amplifier is a small, low power, low noise, low drift, low input current, low input offset voltage instrumentation amplifier, such as the AD8237. Its small MSOP package makes it useful for this application. The microcomputer does not need to be particularly powerful, however it needs to be able to acquire and transmit the data in real-time. Luckily the highest frequency to be captured is 150Hz, so a sample rate of 500 samples/second (greater than the Nyquist rate for this signal) can be used. Oversampling does not necessarily improve signal quality.[4]

Communications:

An external circuit attached to the prosthesis acts as the master device, while several implant devices act as slaves. To generate a full picture of the muscular activity, electrodes are placed in strategic locations across the muscle belly (the largest part of the muscle) where the signals are largest and at ground points (bony areas such as the elbow, wrist or knee) to process out ambient noise. Communication between devices is achieved by assigning unique addresses to each implanted device and cycling between addresses to request data back. The speed of data acquisition is therefore directly proportional to the number of implanted devices, which is not ideal, however this is a simple approach. The electric field can be used to power each device while addressing using a modulation scheme such as PPM or PSK; amplitude modulated signals are not suitable as the inductive coupling is also used for power transfer. A low power NFC transponder connected over SPI or I2C to a low power microcontroller handles ADC operations.

4 Jeffrey C. Ives, Janet K. Wigglesworth. Sampling rate effects on surface EMG timing and amplitude measures. Department of Exercise and Sport Sciences, Center for Health Sciences, Ithaca College, Ithaca, NY 14850, USA. 31 May 2003

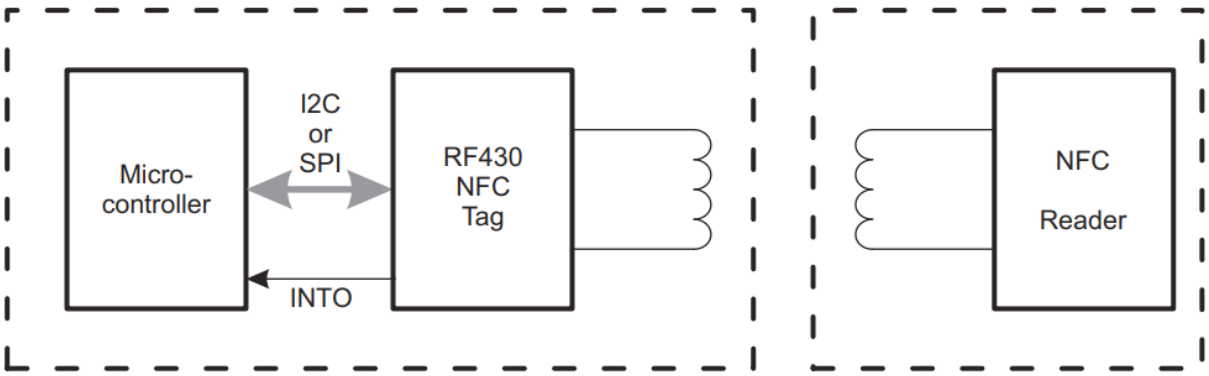

Figure 4: Interfacing From Prosthesis to Sensor

Figure from RF430CL330H datasheet

A standard configuration as shown in *Figure 4* can be used to interface the wirelessly transmitted data to the microcomputer in NFC Data Exchange Format (NDEF) over SPI or I2C[5]. The NDEF format is useful as it carries identifier tags and a text payload. When the transmission signal is active, RF430, microcontroller, amplifiers and active filters are powered up. The transmitter sends a command to request data from a particular device ID. The microcontroller reads the received data from the NFC tag and determines whether to read and write the ADC data to its corresponding tag and transmit the data back to the prosthesis.

Power:
Low power components naturally need to be used. The RF430 has a regulated output to power other devices up to 20mA. Ultra low power microcontrollers such as those in the TI 430 series are considered, as they tend to have 10, 12 or 16-bit SAR or Delta-Sigma DACs, SPI/I2C, and low operating power. The benefits of the SAR over Delta-Sigma should be considered, as the high resolution and low noise of the latter may be beneficial; its lower speed of operation is also not an issue at 500Hz minimum sample rate. For example, the MSP430F2013-EP has an operating current of 220µA at 2.2V (484µW) and 1MHz, with a standby current of 0.5µA (1.1µW) or an off state current while maintaining the RAM data of 0.1µA (0.22µW). The power consumed by the RF430 at 5V while the antenna is not transmitting is 70mW, and it has a sleep mode power consumption while maintaining the output power regulator of 1mW. This is well within the power delivery capabilities of NFC.

5 See RF430CL330H datasheet section 5.9

Physical Layout:
The casing is a biocompatible glass shell for transponders such as Schott 8625 or any other compatible bioglass, approximately 5-6mm in diameter. The end caps function as the electrodes and are connected to the differential amplifier inputs. The anti-migration coating is a secondary consideration to improve operation; it prevents the implant from shifting around within the muscle tissue, which can be a source of electrical noise. This type of coating is used in some transponder implants, but not others, so it may not be necessary. The benefit of this physical package design is that it can be easily implanted using industry standard implant syringes directly into the muscle tissue without the need for large scalpel cuts.

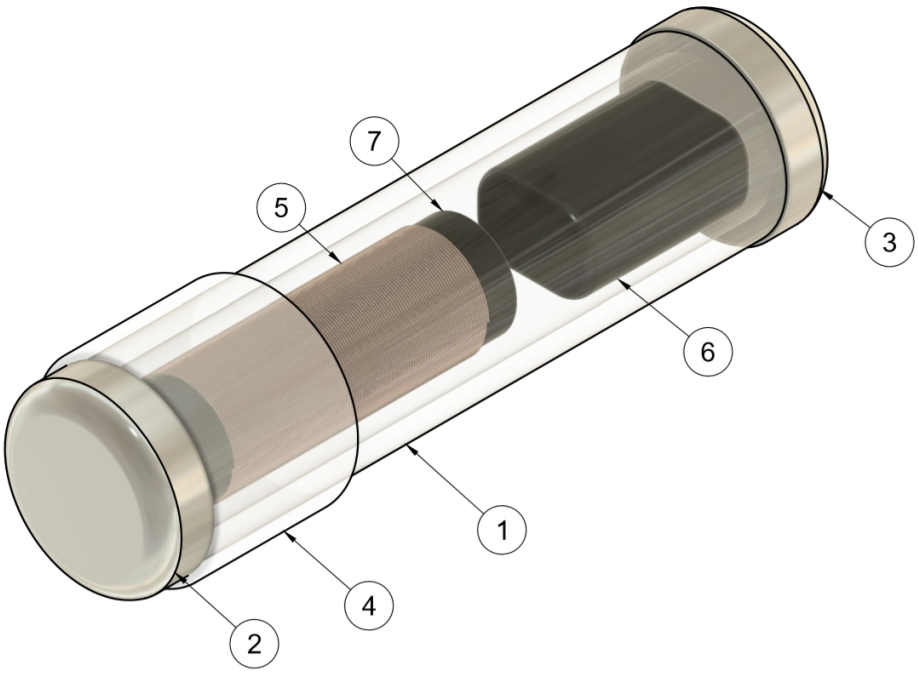

Figure 5: 3D model of Implant Device

Label	Description
1	Bioglass Tube
2	Non-Inverting Endcap
3	Inverting Endcap
4	Anti-migration coating
5	Power/Data Coil Antenna
6	Electronics (Potted in Resin)
7	Coil Support Core (plastic)

Benefits Over Traditional Surface Electrodes

Low Noise:
Several common sources of noise are reduced by placing the electrodes directly on the muscle tissue, such as electrode–skin contact noise and motion artefacts. Cable motion artefacts are removed by using a wireless connection. The amount of subcutaneous fat between a surface electrode and the muscle affects the amplitude of the EMG signal, with more fat reducing the RMS amplitude by 31% for a 3mm layer, 80% for 9mm, and 90% for 18mm[6]. Overall, placing the sensor directly on the muscle tissue reduces noise, increases signal amplitude, meaning the signal to noise ratio is maximised.

Ease of use:
Proper skin cleaning and preparation is required before each application of surface electrodes to ensure signal integrity. This new design allows the sensor to be semi-permanent, waterproof, and robust against vigorous movements which lead to detached electrodes and noise. Protective 'socks' are often worn for comfort to prevent the prosthesis from rubbing against the skin, however these can obstruct access to electrodes and their comfort is reduced by the surface electrodes. 'Socks' can be worn without issue with the proposed design.

Difficulties

Regulatory:
While existing NFC ICs would be ideal, a slightly higher communication frequency may need to be used to comply with the MedRadio and ETSI standard Medical Body Area Network (MBAN) frequency ranges for small medical devices: 401 – 402 MHz and 405-406 MHz. This may require custom hardware development which would increase costs.

Development & Roll-out

For development, prototype breakout boards for the controller and sensor devices would be manufactured. Once the electrical characteristics are verified and the software is developed, we would need to work with biomedical implant fabricators as the fabrication is too complex to undertake in-house.

Conclusion

Implantable myoelectric sensors as described in this report create a relatively low cost, expandable platform for interfacing muscles to electronics, without many of the drawbacks of traditional surface EMG. The device integrates seamlessly with the user, allowing greater freedom and comfort in their life. I believe that if this device is manufactured and released as open datasheet, and is well documented, it will successfully fill a niche in the prosthetic market.

6 Kuiken, T. A., Lowery, M. M. and Stoykov, N. S. (2003) 'The effect of subcutaneous fat on myoelectric signal amplitude and cross-talk', Prosthetics and Orthotics International, 27(1), pp. 48–54. doi: 10.3109/03093640309167976.